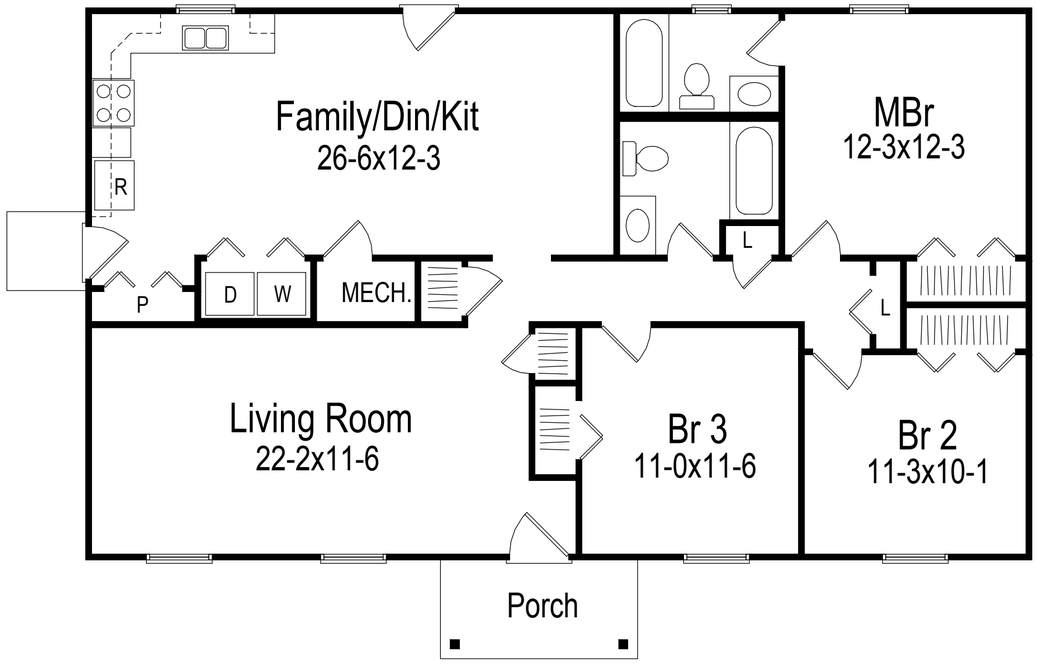

TOTAL HEATED SQUARE FEET - 1,344

AREA SUMMARY	
MAIN FLOOR:	1,344 S.F.
CONCRETE STOOPS:	50 S.F.

DESIGN CRITERIA

YARD LUMBER
Fb = 1,200 PSI
Fv = 105 PSI
E = 1,500,000 PSI

STRUC. LAM. WOOD BEAM
Fb = 2,600 PSI
Fv = 285 PSI
E = 1,800,000 PSI

MINIMUM SOIL BEARING PRESSURE 2,500 PSF
WIND LOAD = 90 M.P.H. NOMINAL

DESIGN LOADS	ROOFS			FLOORS		BALCONIES
	WOOD OR ASPHALT SHINGLES	MISSION TILE	BUILT-UP	WOOD, CARPET, OR VINYL	CER. TILE QUARRY, BURN OR STONE	SPACED DECK
DEAD LOAD (PSF)	10	20	19	10	20	7
LIVE LOAD (PSF)	30	30	30	40	40	60
TOTAL (PSF)	40	50	49	50	60	67

NOTES:

Great care and effort have gone into the creation of the design and engineering of these plans. However, Designs America, Inc. cannot be responsible for any "on-site" or "on-the-site" consulation and supervision over the actual construction, and because of the great variance in local building code requirements, and other local building and zoning ordinances, Designs America, Inc. assumes no responsibility for any damages, including structural failures, due to any deficiencies, omissions or errors in the design, blueprints, or materials list. Furthermore, we are not responsible for any deficiencies in workmanship, or failure to follow the plans, specifications, or any local and/or national codes, and check loads other than those indicated at right, or for any unusual conditions. It is recommended that a local architect or engineer familiar with your local building codes and practices be consulted prior to start of actual construction.

These drawings are not to be copied or reproduced without written permission from Design America, Inc. © Date of original design.

NOTES:
THESE DRAWINGS ARE TO BE USED IN CONJUCTION WITH THE ACCOMPANYING GENERAL BUILDING SPECIFICATIONS PREPARED BY DESIGNS AMERICA, INC. ALL LOCAL CODES SHALL PREVAIL. CONTRACTOR TO VERIFY ALL DIMENSIONS BEFORE CONSTRUCTION BEGINS.

DESIGNAMERICA

SHEET INCLUDES:
COVER SHEET

DESIGN NO.
001D-0091
RRR SLAB
(REV. 8-27-20)
(REV. 9-26-23)
(REV. 2-23-24)

SHEET: 3/29/2024

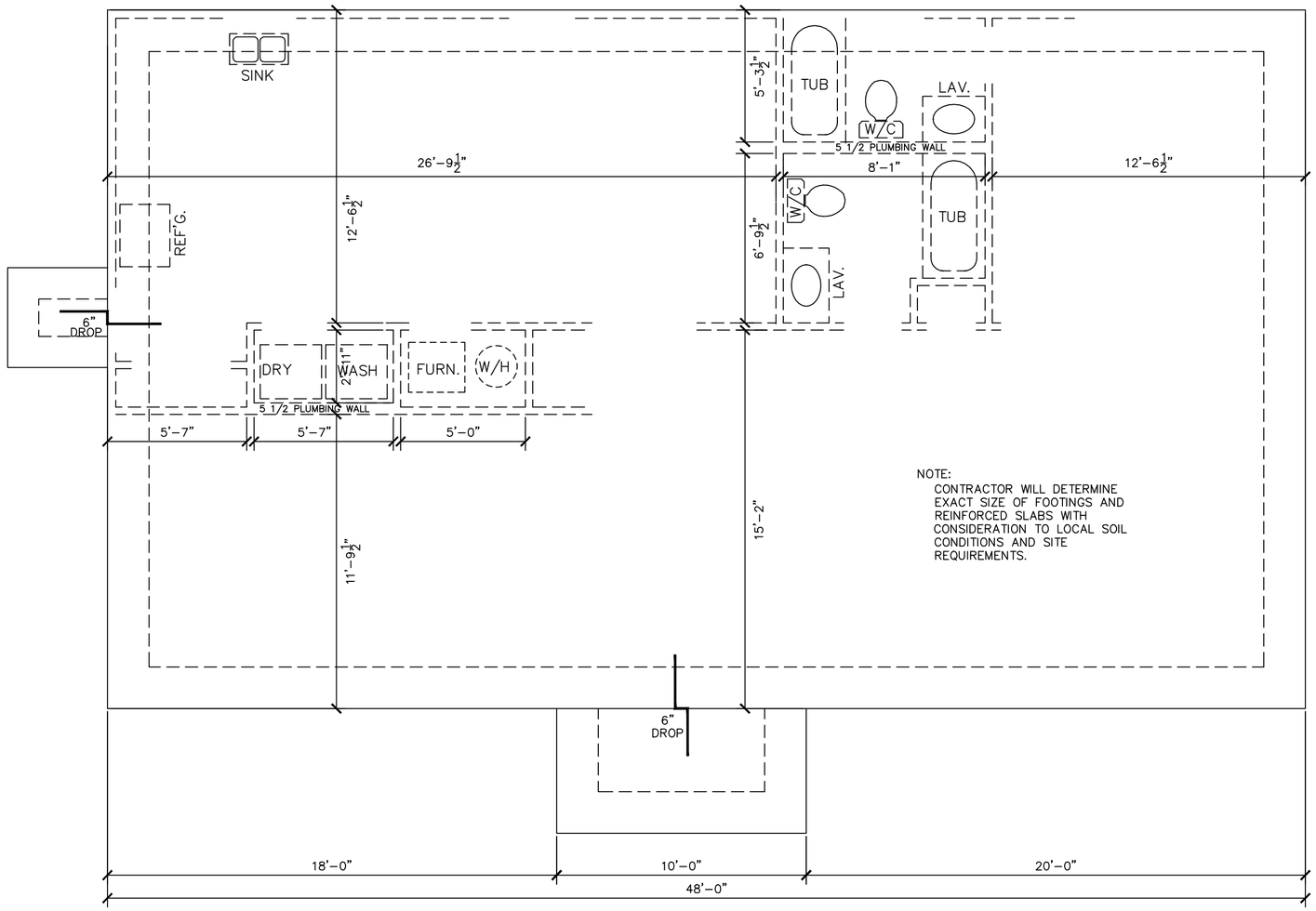

NOTE:
CONTRACTOR WILL DETERMINE EXACT SIZE OF FOOTINGS AND REINFORCED SLABS WITH CONSIDERATION TO LOCAL SOIL CONDITIONS AND SITE REQUIREMENTS.

SLAB FOUNDATION

SCALE: 1/4" = 1'-0"

NOTES:

DESIGN CRITERIA	YARD LUMBER	STRUC. LAM. WOOD BEAM
	Fb = 1,200 PSI Fv = 95 PSI E = 1,500,000 PSI	Fb = 2,600 PSI Fv = 265 PSI E = 1,800,000 PSI

MINIMUM SOIL BEARING PRESSURE: 2,500 PSF

WIND LOAD = 90 M.P.H. NOMINAL

DESIGN LOADS	ROOFS			FLOORS		BALCONIES
	WOOD OR ASPHALT SHINGLES	MISSION TILE	BUILT-UP	WOOD, CARPET, OR VINYL	CERAMIC TILE, SLATE, OR STONE	SPACED DECK
DEAD LOAD (PSF)	10	20	19	10	20	7
LIVE LOAD (PSF)	30	30	30	40	40	60
TOTAL (PSF)	40	50	49	50	60	67

Great care and effort have gone into the creation of the design and engineering of these plans. However, because of the impossibility of providing any personal and/or on-site-by-site consultation and supervision over the actual construction, and because of the great variety of materials, workmanship, and other local building and weather conditions, Design America, Inc. assumes no responsibility for any damages, including structural failures, due to any deficiencies, omissions, errors or mistakes in these drawings. Also, due to any other conditions (i.e. hurricane, earthquake, snow, etc.) cause should soil and/or weather conditions, or any unusual conditions, it is recommended that you consult a local architect or engineer and/or your local building officials, prior to start of actual construction.

These drawings are not to be copied or reproduced without written permission from Design America, Inc. © Date of original design:

NOTES:
THESE DRAWINGS ARE TO BE USED IN CONJUCTION WITH THE ACCOMPANYING GENERAL BUILDING SPECIFICATIONS PREPARED BY DESIGN AMERICA, INC. ALL LOCAL CODES SHALL PREVAIL. CONTRACTOR TO VERIFY ALL DIMENSIONS BEFORE CONSTRUCTION BEGINS.

DESIGNAMERICA

SHEET INCLUDES:
SLAB FOUNDATION PLAN

DESIGN NO.
001D-0091
RRR SLAB
(REV. 8-27-20)
(REV. 9-26-23)
(REV. 2-23-24)

SHEET: 3/29/2024
2 of 6

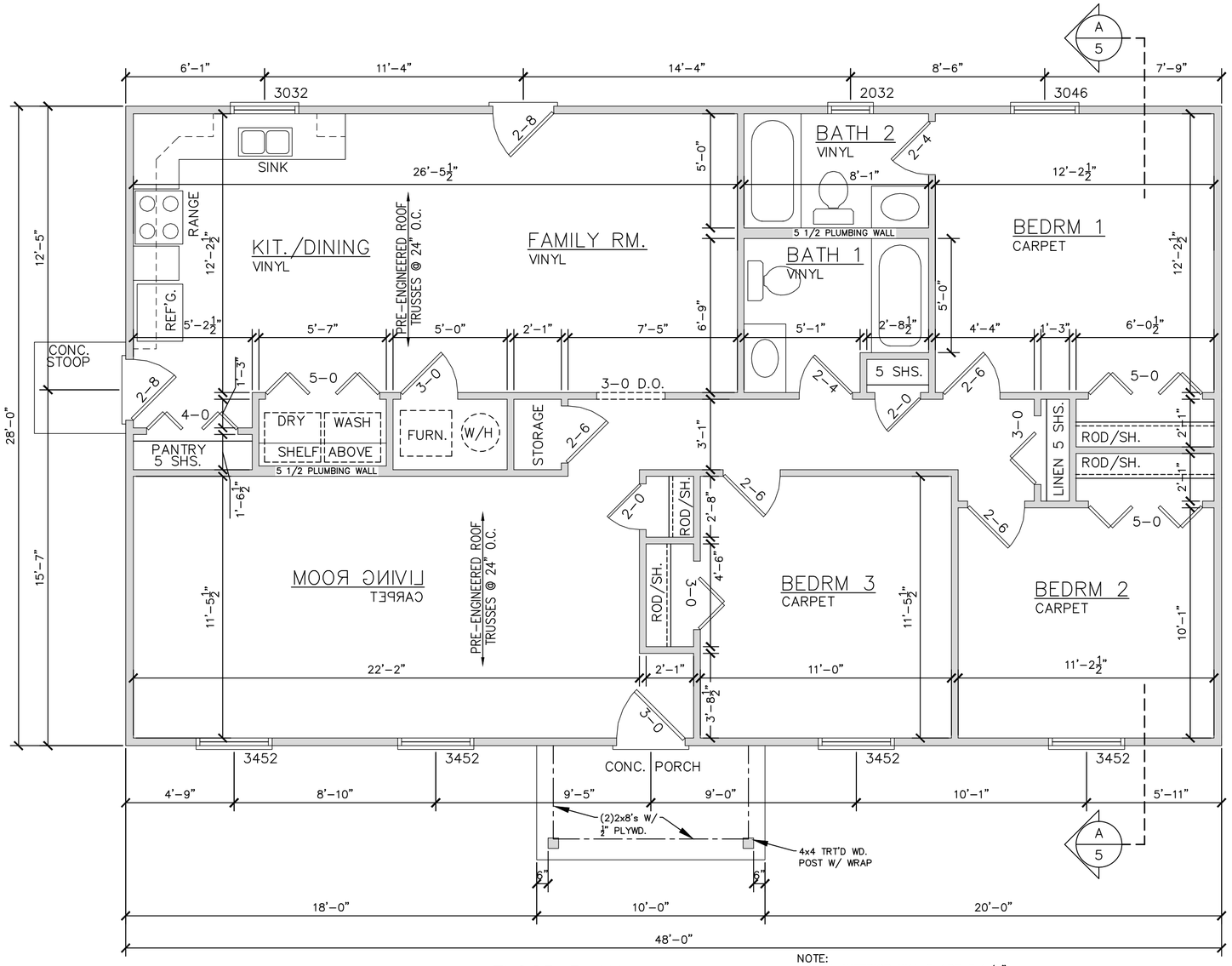

FLOOR PLAN
SCALE: 1/4" = 1'-0"

NOTE:
1. ALL INTERIOR WALLS ARE 3 1/2" THICK UNLESS OTHERWISE NOTED.
2. ALL EXTERIOR WALLS ARE 4" THICK (2x4 WOOD STUDS W/ 1/2" SHEATHING)
3. ALL HEADERS ARE 2-2x10's W/ 1/2" PLYWOOD UNLESS NOTED OTHERWISE.

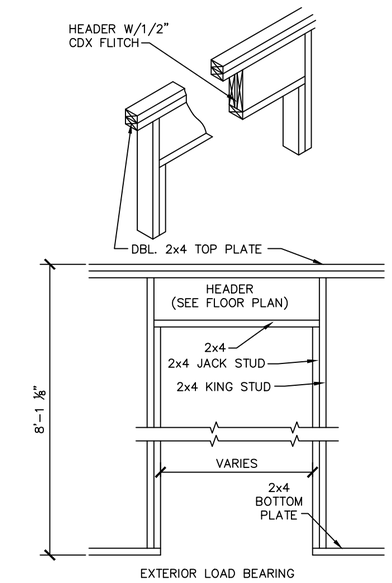

DOOR FRAMING DETAIL
SCALE: N.T.S.

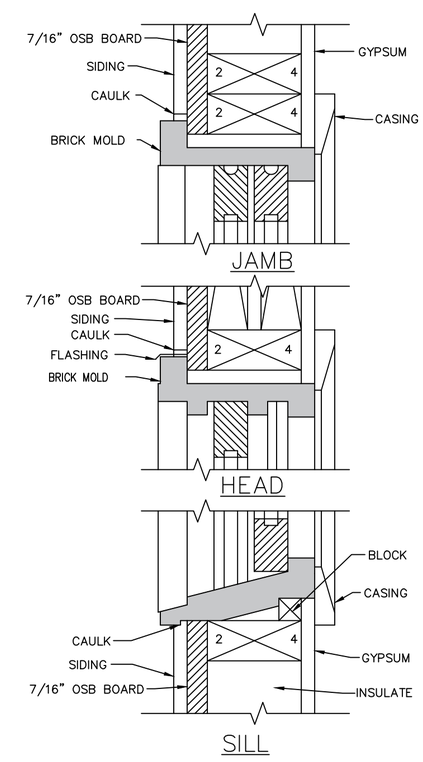

WOOD WINDOW SECTION
NOT TO SCALE

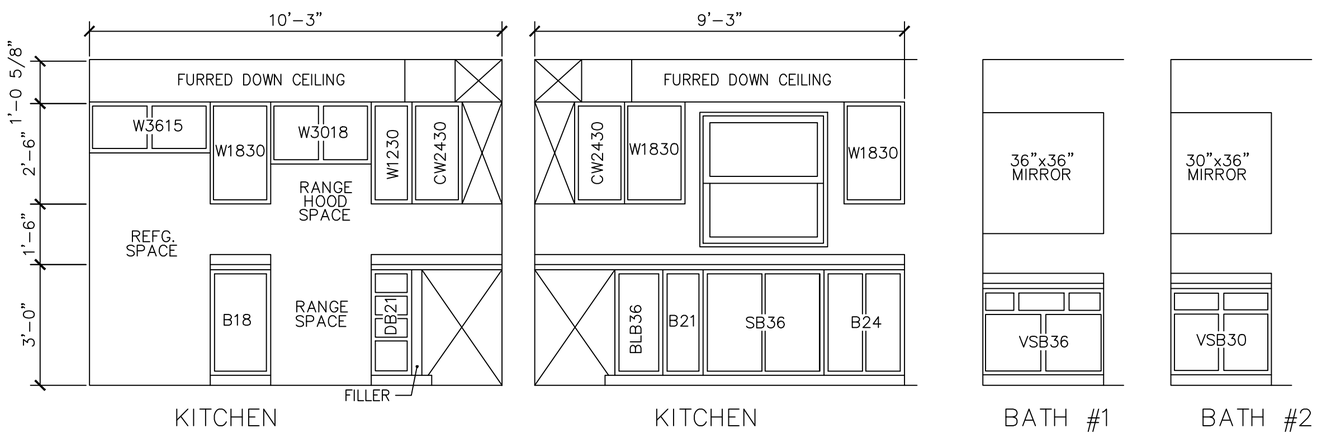

CABINET ELEVATIONS
SCALE: 3/8" = 1'-0"

NOTE:
FINAL CABINET SIZES AND SELECTIONS TO BE DETERMINED BY OWNER/CONTRACTOR UPON FIELD VERIFYING ALL MEASUREMENTS PRIOR TO ORDERING CABINETRY.

NOTES:

DESIGN CRITERIA

YARD LUMBER		STRUC. LAM. WOOD BEAM
Fb = 1,200 PSI		Fb = 2,600 PSI
Fv = 105 PSI		Fv = 285 PSI
E = 1,500,000 PSI		E = 1,800,000 PSI

MINIMUM SOIL BEARING PRESSURE 2,500 PSF

DESIGN LOADS	ROOFS			FLOORS		BALCONIES
	WOOD OR ASPHALT SHINGLES	MISSION TILE	BUILT-UP	WOOD, CARPET OR VINYL	CER. TILE LIVE OAK STONE	SPACED DECK
DEAD LOAD (PSF)	10	20	19	10	20	7
LIVE LOAD (PSF)	30	30	30	40	40	60
TOTAL (PSF)	40	50	49	50	60	67

Great care and effort have gone into the creation of the design and engineering of these plans. However, it is the responsibility of the contractor, homeowner and/or "on-the-site" consulation and supervision over the actual construction, and because of the great variance in local building code requirements, and other local ordinances, governing standards, practices, and materials, and the variability of weather conditions, we cannot be responsible for any damages, including structural failures, due to any deficiencies, errors in the design, blueprints, or materials. 1st Furthermore, conditions such as soil, water, wind, earthquake, termites, dry rot, etc.) cause loads other than those indicated at right, or for any unusual conditions, it is recommended that you consult a local architect or engineer of your choice, and check with your local building officials, prior to start of actual construction.

These drawings are not to be copied or reproduced without written permission from Design America, Inc. © Date of original design.

NOTES:
THESE DRAWINGS ARE TO BE USED IN CONJUCTION WITH THE ACCOMPANYING GENERAL BUILDING SPECIFICATIONS PREPARED BY DESIGN AMERICA, INC. ALL LOCAL CODES MAY PREVAIL. CONTRACTOR TO VERIFY ALL DIMENSIONS BEFORE CONSTRUCTION BEGINS.

DESIGNAMERICA

SHEET INCLUDES:
FIRST FLOOR PLAN
CABINET ELEVATIONS
WINDOW SECTION
DR. FRAMING DETAIL

DESIGN NO.
001D-0091
RRR SLAB
(REV. 8-27-20)
(REV. 9-26-23)
(REV. 2-23-24)

SHEET: 3/29/2024
3 of 6

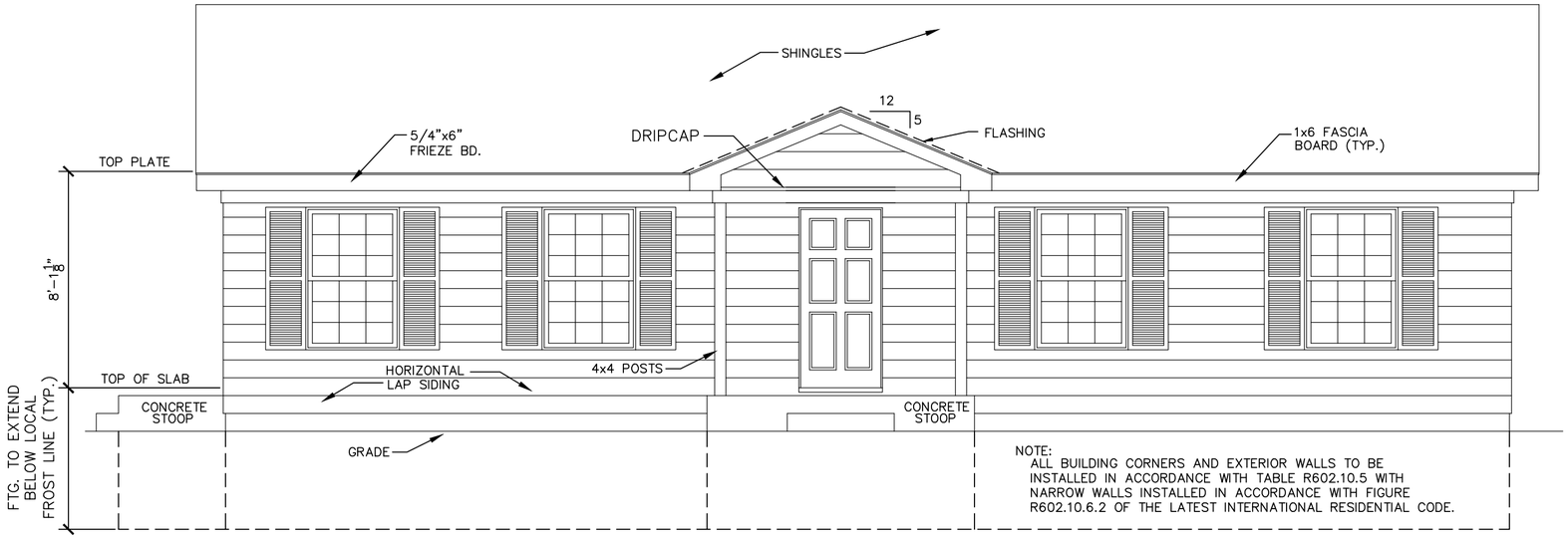

FRONT ELEVATION
SCALE: 1/4" = 1'-0"

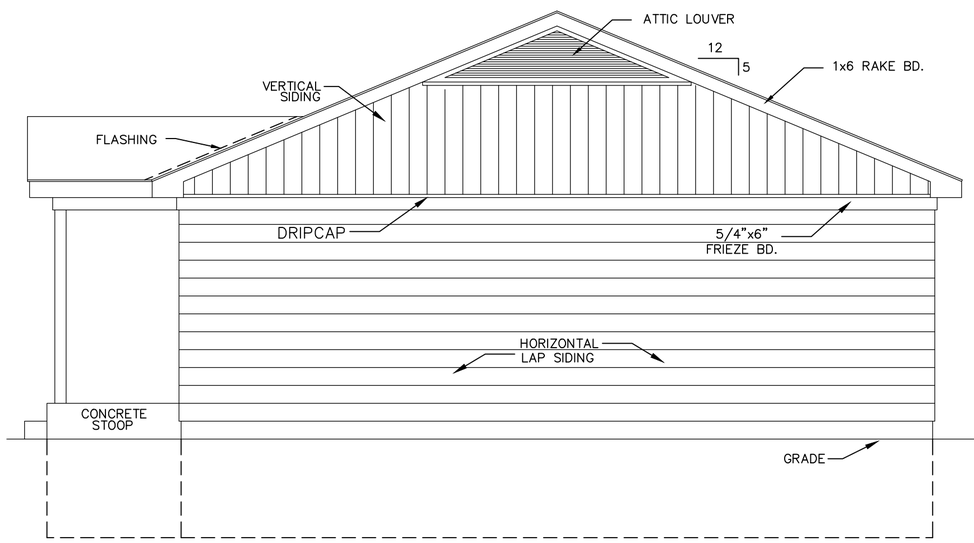

RIGHT ELEVATION
SCALE: 1/4"=1'-0"

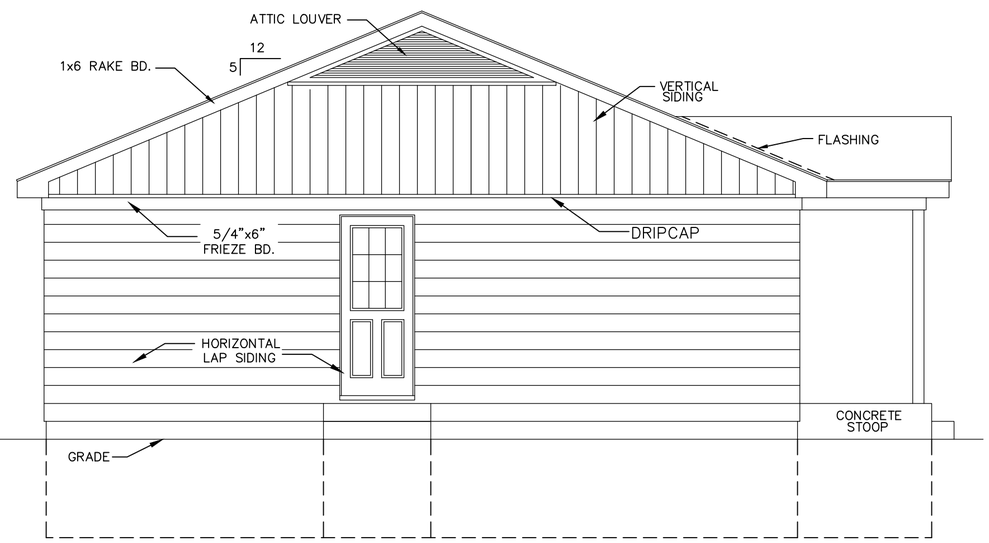

LEFT ELEVATION
SCALE: 1/4"=1'-0"

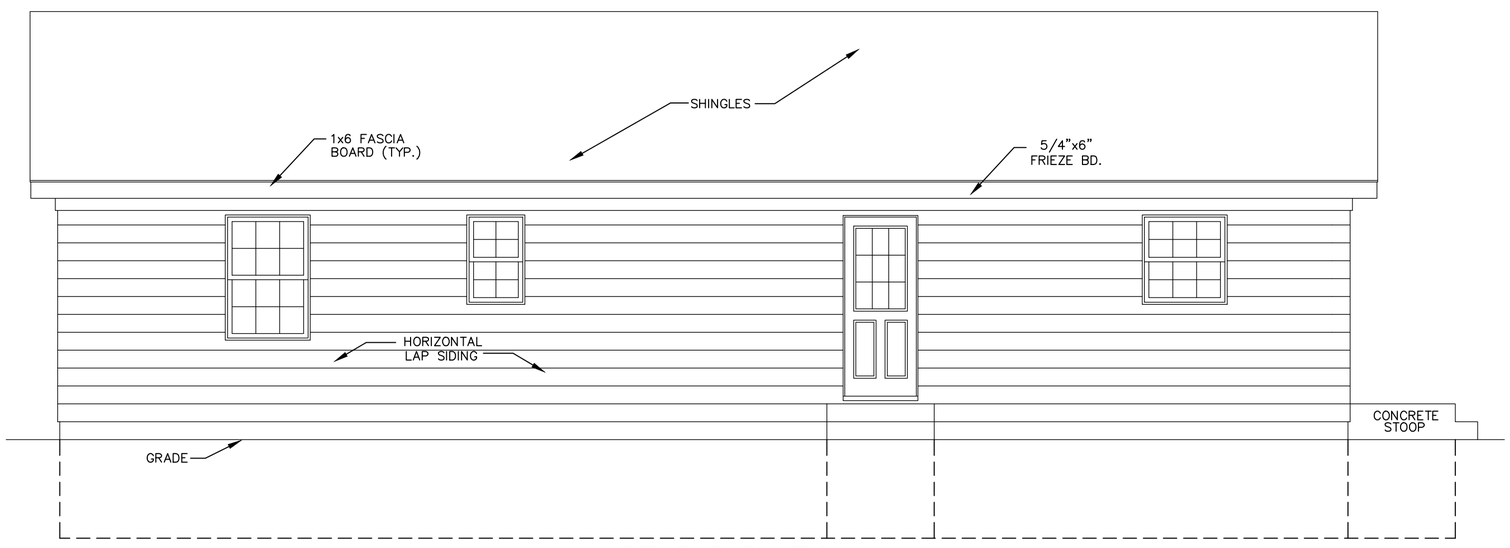

REAR ELEVATION
SCALE: 1/4"=1'-0"

NOTES:

DESIGN CRITERIA	YARD LUMBER		STRUC. LAM. WOOD BEAM
	Fb = 1,200 PSI		Fb = 2,600 PSI
	Fc = 1,105 PSI		Fc = 2,565 PSI
	E = 1,500,000 PSI		E = 1,800,000 PSI
MINIMUM SOIL BEARING PRESSURE: 2,500 PSF			
WIND LOAD = 90 M.P.H. NOMINAL			

DESIGN LOADS	ROOFS			FLOORS		BALCONIES
	WOOD OR ASPHALT SHINGLES	MISSION TILE	BUILT-UP	WOOD, CARPET, OR VINYL	CERAMIC TILE, SLATE, OR STONE	SPACED DECK
DEAD LOAD (PSF)	10	20	19	10	20	10
LIVE LOAD (PSF)	30	30	30	40	40	40
TOTAL (PSF)	40	50	49	50	60	67

Great care and effort have gone into the creation of the design and engineering of these plans. However, because of the impossibility of providing any personal and/or property specific information, the various structural and/or architectural details because of the great variance in local building code requirements, and other local building and weather conditions, Design America, Inc. assumes no responsibility for any errors or omissions in these plans, specifications, or other documents, due to any deficiencies, omissions or errors in the design, blueprints, or materials list. Furthermore, should soil and/or weather conditions (i.e. hurricane, earthquake, snow, etc.) cause losses, injuries or damages to the structure, the owner and/or builder is cautioned and warned that you consult a local architect or engineer of your choice, and check with your local building officials, prior to start of actual construction.

NOTES:
THESE DRAWINGS ARE TO BE USED IN CONJUCTION WITH THE ACCOMPANYING GENERAL BUILDING SPECIFICATIONS PREPARED BY DESIGN AMERICA, INC. ALL LOCAL CODES SHALL PREVAIL. CONTRACTOR TO VERIFY ALL DIMENSIONS BEFORE CONSTRUCTION BEGINS.

These drawings are not to be copied or reproduced without written permission from Design America, Inc. © Date of original design.

DESIGNAMERICA

SHEET INCLUDES:
FRONT ELEVATION
REAR ELEVATION
RIGHT ELEVATION
LEFT ELEVATION

DESIGN NO.
001D-0091
RRR SLAB
(REV. 8-27-20)
(REV. 9-26-23)
(REV. 2-23-24)

SHEET: 3/29/2024

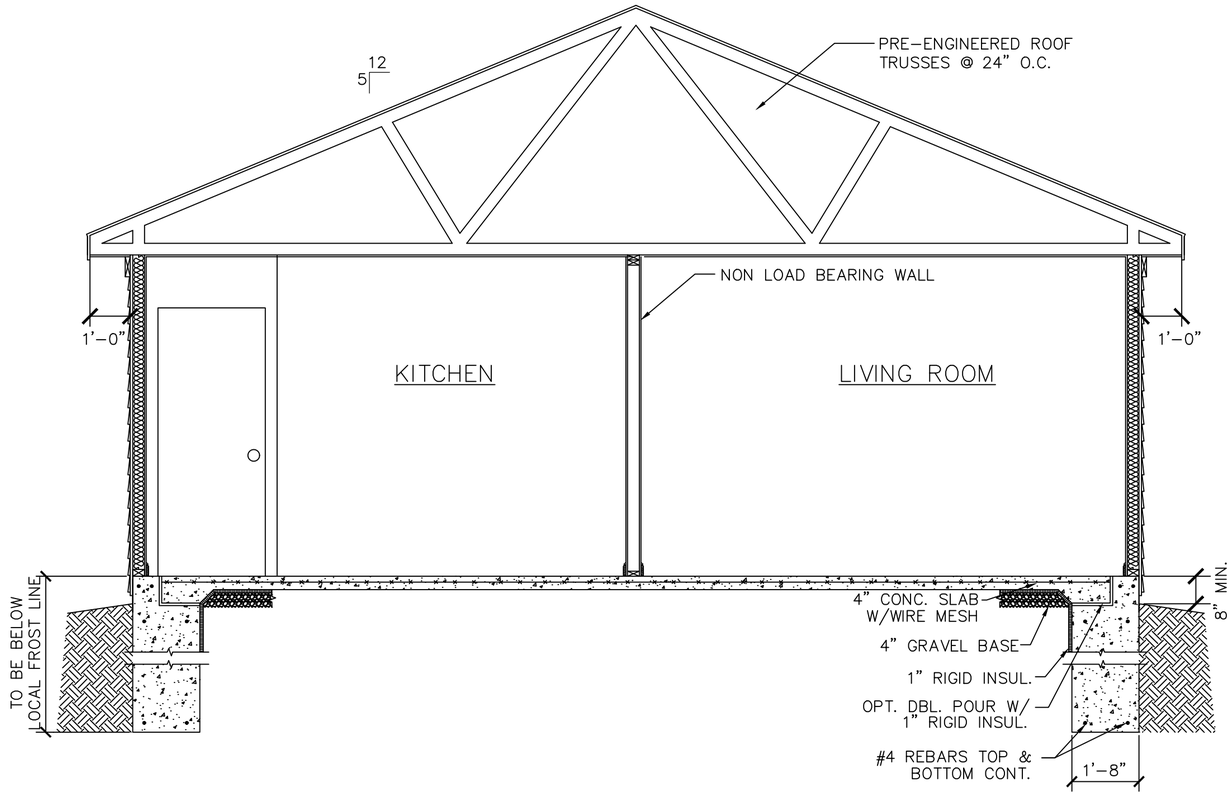

SECTION A–A

SCALE: 3/8" = 1'-0"

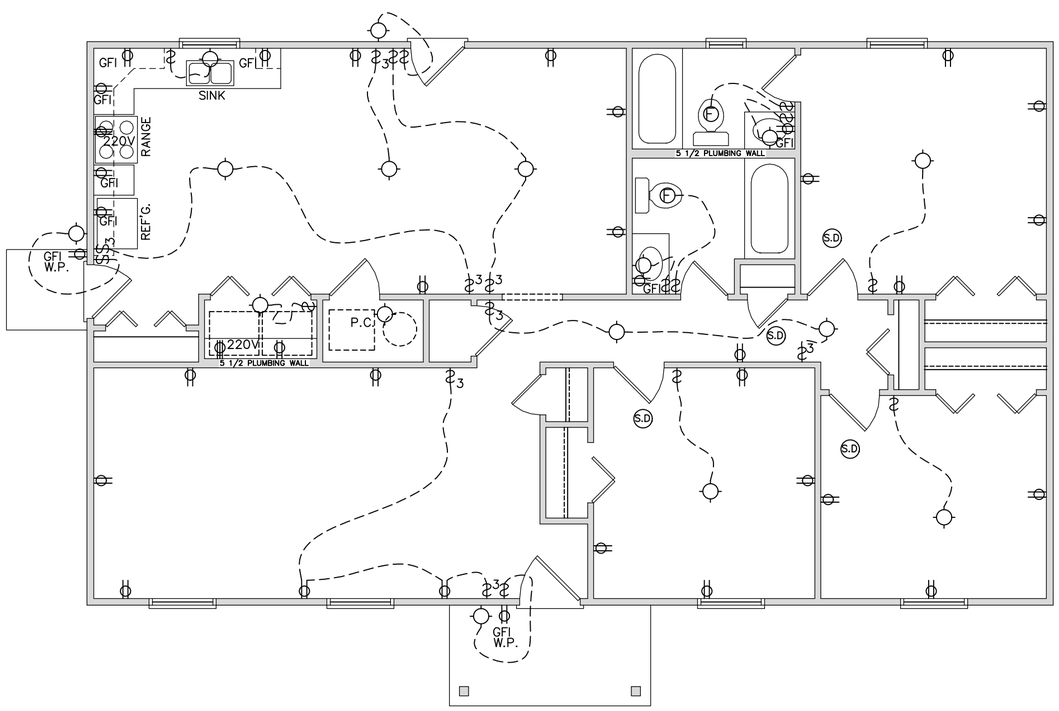

ELECTRICAL FLOOR PLAN

SCALE: NOT TO SCALE

NOTE:
1. ALL EXTERIOR OUTLETS AND OUTLETS IN THE KITCHEN AND BATHROOMS ARE TO BE GFI PROTECTED.
2. ALL SMOKE DETECTORS (SD) SHALL BE INTERCONNECTED SO ALARM WILL SOUND THROUGHOUT THE DWELLING. EACH IS TO BE AC POWERED WITH BATTERY BACKUP.
3. PROVIDE MINIMUM OF ONE CARBON MONOXIDE DETECTOR
4. ARC-FAULT CIRCUIT INTERRUPTION PROTECTION SHALL BE PROVIDED IN ALL BEDROOMS

NOTES:

DESIGN CRITERIA	YARD LUMBER	STRUC. LAM. WOOD BEAM
	Fb = 1,200 PSI Fv = 145 PSI E = 1,500,000 PSI	Fb = 2,600 PSI Fv = 405 PSI E = 1,800,000 PSI

MINIMUM SOIL BEARING PRESSURE: 2,500 PSF

WIND LOAD = 90 M.P.H. NOMINAL

DESIGN LOADS	ROOFS			FLOORS		BALCONIES
	WOOD OR ASPHALT SHINGLES	MISSION TILE	BUILT-UP	WOOD, CARPET, OR VINYL	CERAMIC TILE, SLATE, OR STONE	SPACED DECK
DEAD LOAD (PSF)	10	20	19	10	20	7
LIVE LOAD (PSF)	30	30	30	40	40	60
TOTAL (PSF)	40	50	49	50	60	67

Great care and effort have gone into the creation of the design and engineering of these plans. However, because of the impossibility of providing any personal and/or on-site consultation and supervision over the actual construction and/or building and weather conditions, Design America, Inc. assumes no responsibility for errors, omissions or errors in the design, blueprints, or materials list. Furthermore, should soil and/or weather conditions (i.e. hurricane, earthquake, snow, etc.) cause structural damage, these plans should not be used without first having them reviewed and amended that you consult a local architect or engineer of your choice, and check with your local building officials, prior to start of actual construction.

These drawings are not to be copied or reproduced without written permission from Design America, Inc. © Date of original design.

NOTES:
THESE DRAWINGS ARE TO BE USED IN CONJUCTION WITH THE ACCOMPANYING GENERAL BUILDING SPECIFICATIONS PREPARED BY DESIGN AMERICA, INC. ALL LOCAL CODES SHALL PREVAIL. CONTRACTOR TO VERIFY ALL DIMENSIONS BEFORE CONSTRUCTION BEGINS.

DESIGNAMERICA

SHEET INCLUDES:
ELECTRICAL FLOOR PLAN
CROSS SECTION

DESIGN NO.
001D-0091
RRR SLAB
(REV. 8-27-20)
(REV. 9-26-23)
(REV. 2-23-24)

SHEET: 3/29/2024

FIRST OR SECOND FLR. CEILING/ ROOF (SHOWING RAISED HEEL)

FIRST OR SECOND FLR. / CEILING ROOF (SHOWING STANDARD HEEL)

SECOND FLOOR WHERE APPLICABLE

SLAB FOUNDATION / FIRST FLOOR

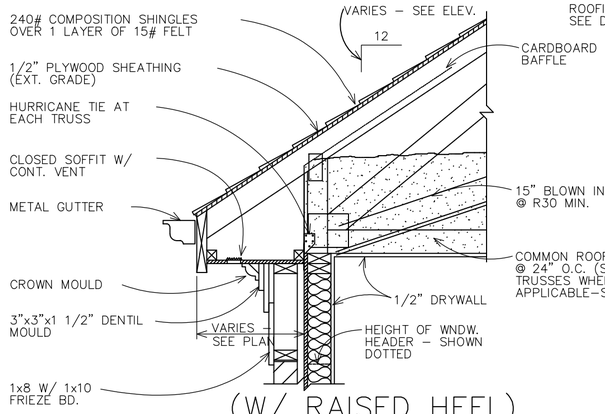

(W/ RAISED HEEL)

SCALE: 3/4" = 1'–0"

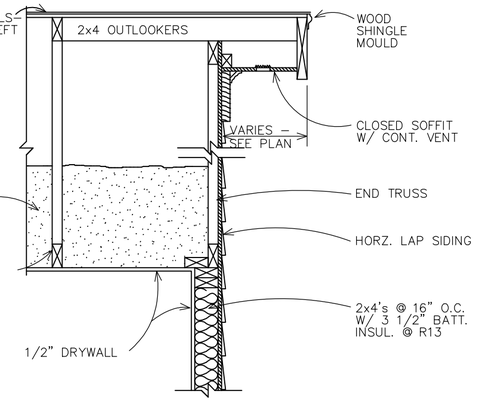

GABLE–END DETAIL

SCALE: 3/4" = 1'–0"

NOTE:
COMPLIANCE WITH ALL LOCAL/ AREA BUILDING CODES IS THE ULTIMATE RESPONSIBILITY OF THE CONTRACTOR.

NOTE:
ALL CORNERS OF EXTERIOR WALLS TO BE INSTALLED IN ACCORDANCE WITH FIGURE R602.10.5 AND NARROW WALLS TO BE INSTALLED IN ACCORDANCE WITH FIGURE R602.10.6.2 OF THE LATEST INTERNATIONAL RESIDENTIAL CODE

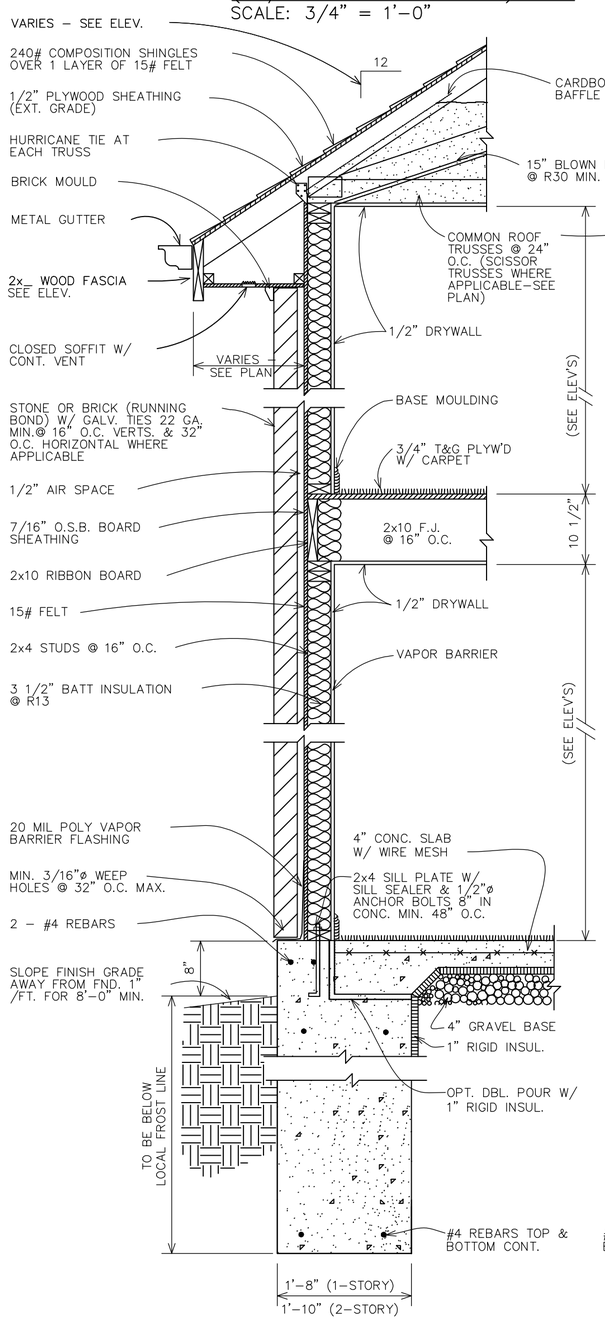

TYP. WALL SECTION W/ BRICK

SCALE: 3/4" = 1'–0"

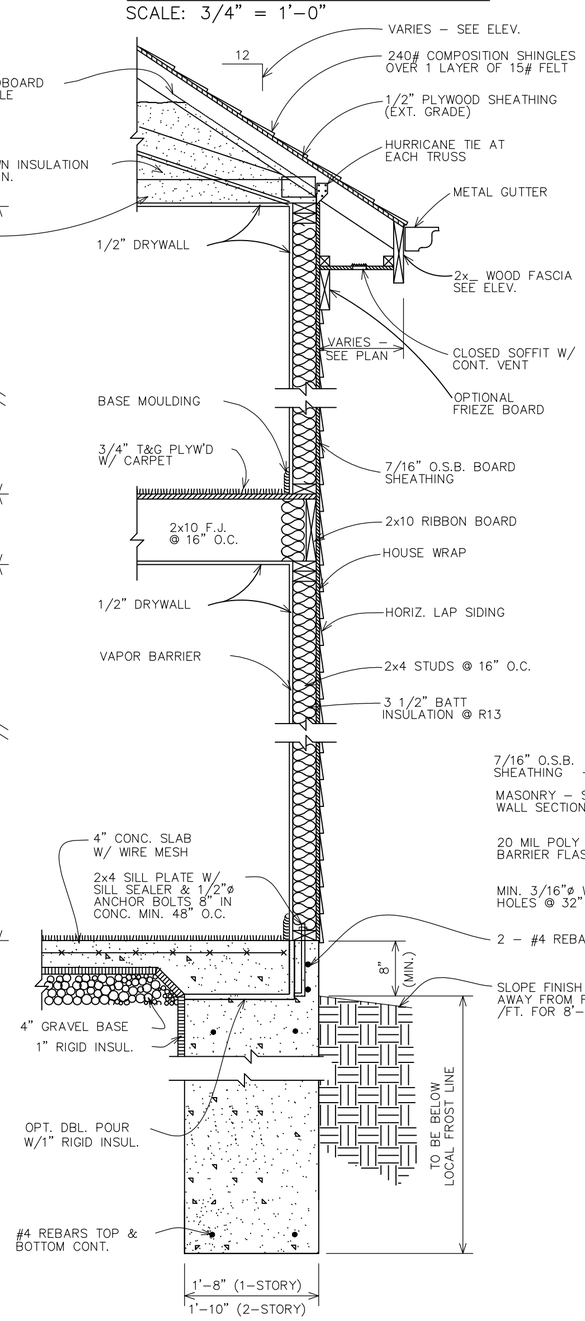

TYP. WALL SECTION W/ SIDING

SCALE: 3/4" = 1'–0"

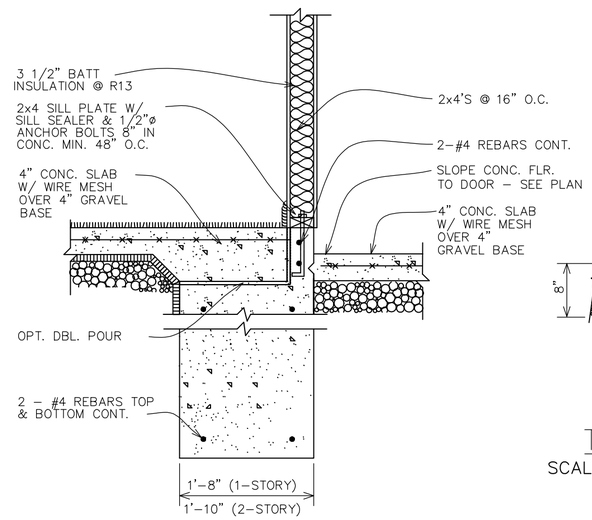

GARAGE FND. AT HOUSE

SCALE: 3/4" = 1'–0"

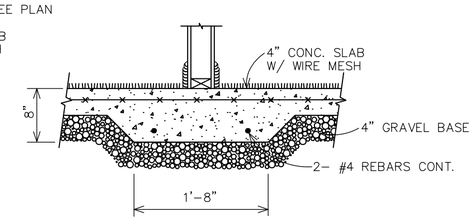

THICKENED SLAB DETAIL

SCALE: 3/4" = 1'–0"

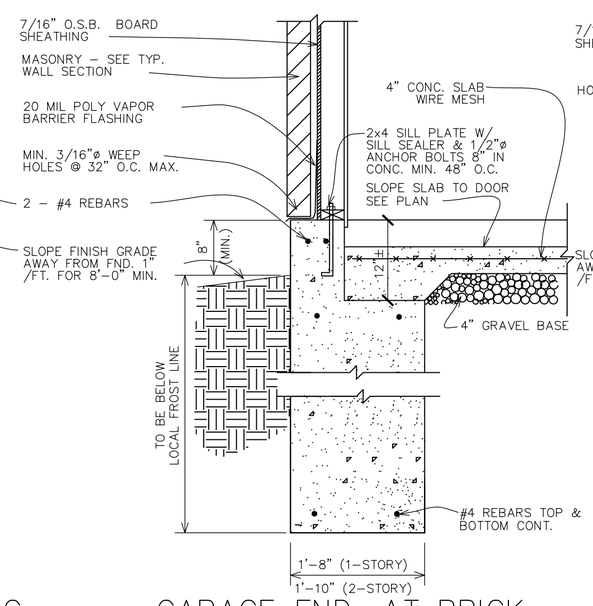

GARAGE FND. AT BRICK

SCALE: 3/4" = 1'–0"

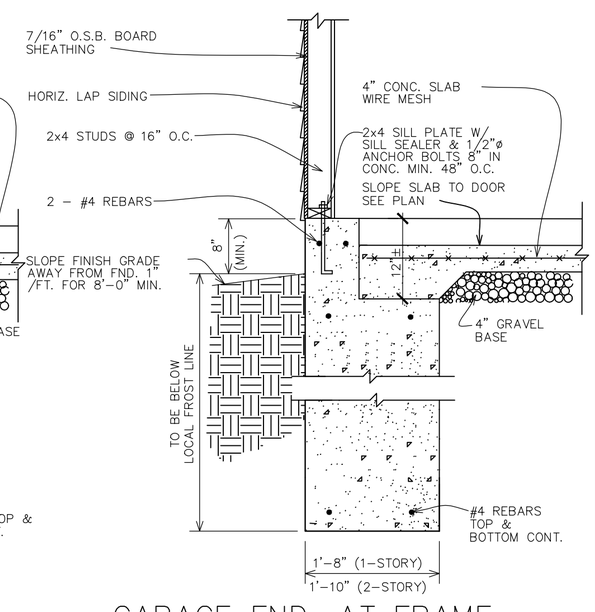

GARAGE FND. AT FRAME

SCALE: 3/4" = 1'–0"

NOTES:

DESIGN CRITERIA	YARD LUMBER		STRUC. LAM. WOOD BEAM
	Fb = 1,200 PSI		Fb = 2,600 PSI
	Fv = 105 PSI		Fv = 285 PSI
	E = 1,500,000 PSI		E = 1,800,000 PSI
MINIMUM SOIL BEARING PRESSURE: 2,500 PSF			
WIND LOAD = 90 M.P.H. NOMINAL			

DESIGN LOADS	ROOFS			FLOORS		BALCONIES
	WOOD OR VINYL SHINGLES	MISSION TILE	BUILT-UP	WOOD, CARPET, VINYL OR VINYL	CER. TILE QUARRY, MARBLE OR STONE	SPACED DECK
DEAD LOAD (PSF)	10	20	19	10	20	7
LIVE LOAD (PSF)	30	30	30	40	40	60
TOTAL (PSF)	40	50	49	50	60	67

NOTES:
THESE DRAWINGS ARE TO BE USED IN CONJUCTION WITH THE ACCOMPANYING CONSTRUCTION SPECIFICATIONS PREPARED BY DESIGN AMERICA INC. ALL LOCAL CODES SHALL PREVAIL. CONTRACTOR TO VERIFY ALL DIMENSIONS BEFORE CONSTRUCTION BEGINS.

Great care and effort have gone into the creation of the design and engineering of these plans. However, because of the impossibility of providing any personal site or "on-the-site" consulation and supervision over the actual construction, and because of the great variance in local building code requirements, and other local ordinances, rules, and regulations, we must therefore assume no responsibility for any damages, including structural failures, due to any deficiencies, omissions, or errors in the design, blueprints, or materials list. Furthermore, we cannot be responsible for any subsequent changes (omissions, etc.) cause those indicated at right, or for any unusual conditions. It is recommended that a structural engineer be consulted for advice, and check with your local building officials, prior to start of actual construction.

These drawings are not to be copied or reproduced without written permission from Design America, Inc. © Date of original design.

DESIGNAMERICA

SHEET INCLUDES:
TYPICAL SLAB DETAIL SHEET WITH 2x4 EXTERIOR WALLS (NOT ALL DETAILS WILL APPLY)

DESIGN NO.
001D-0091
RRR SLAB
(REV. 8-27-20)
(REV. 9-26-23)
(REV. 2-23-24)

SHEET: 3/29/2024

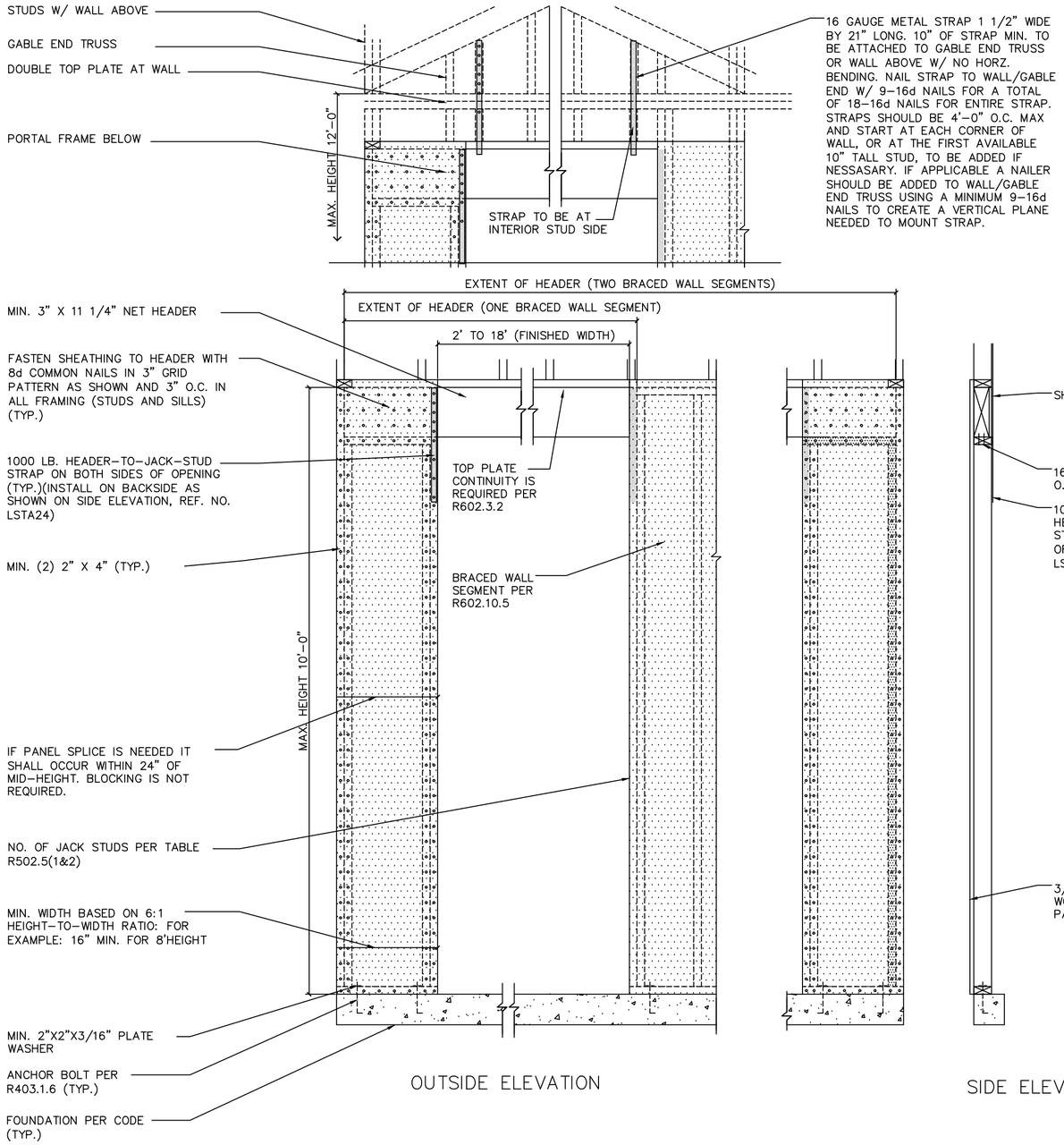

1 APA DETAIL OF NARROW WALL BRACING METHOD WITHOUT HOLD-DOWNS

IMPORTANT CODE REQUIREMENT:
ONLY FOR USE ON HOMES WITH FULLY SHEATHED PLYWOOD OR OSB EXTERIOR WALLS, PER IRC R602.10.5.

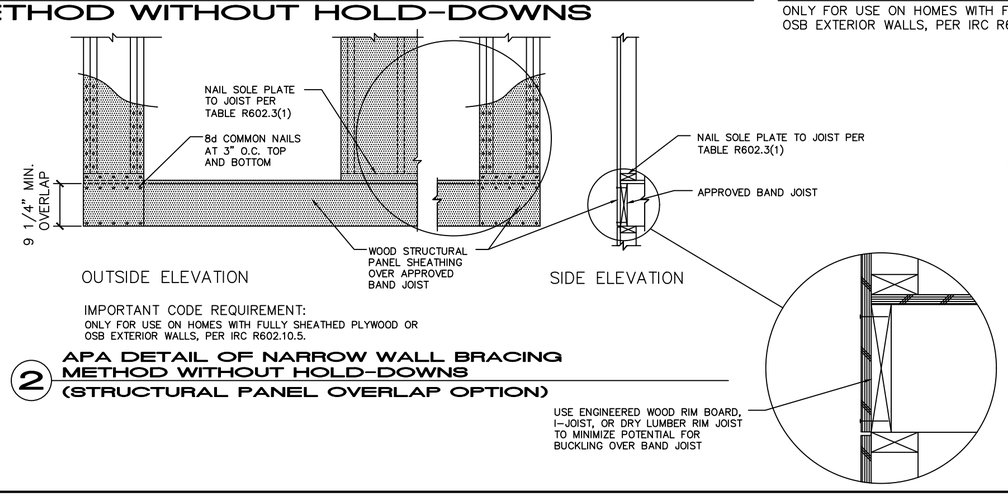

IMPORTANT CODE REQUIREMENT:
ONLY FOR USE ON HOMES WITH FULLY SHEATHED PLYWOOD OR OSB EXTERIOR WALLS, PER IRC R602.10.5.

2 APA DETAIL OF NARROW WALL BRACING METHOD WITHOUT HOLD-DOWNS (STRUCTURAL PANEL OVERLAP OPTION)

STRUCTURAL KEY NOTES

- ALL EXTERIOR WALLS TO BE SHEATHED W/ 7/16" OSB OR 1/2" PLYWD TO MEET THE WHOLE HOUSE STRUCTURALLY SHEATHED SECTION OF THE CODE USING METHOD 3. THIS ALLOWS BRACE PANELS TO BE THE WIDTH ON TABLE 602.10.5. BLOCK AND FASTEN ALL HORZ. JOINTS
- ANY PLACE THAT SEPARATION BETWEEN EXTERIOR BRACED WALLS IS MORE THAN 35FT. AN INTERIOR BRACE WALL PER METHOD 5 IS TO BE USED. THIS IS 1/2" DRYWALL WITH NAILS 7" O.C. (A SEPARATION OF 50FT. IS ALLOWED IF THE AMOUNT OF ALLOWED DW IS INCREASED, EXAMPLE: 50 FT/35 FT = 1.4(25%)=35% OF WALL HAS TO BE DW.
  THE LOCATION OF BRACED WALLS IS 12'-6" FROM ANY CORNER MAX. AND 25FT. O.C. BETWEEN PANELS MAX.
- INTERIOR BRACED WALL LINE TO BE COVERED W/ 1/2" DRYWALL W/ NAILS 7" O.C. PER TABLE R702.3.5 APPLY TO BOTH SIDES OF WALL
  THE FLOOR AND ROOF ABV. AND BLW INT. BRACED WALLS TO BE BLOCKED OR HAVE A PARALLEL CONTINUOUS MEMBER TO FASTEN THE BRACED WALL TO THE DIAPHRAM. BLOCK AND FASTEN ALL HORZ. JOINTS
- <u>ATTACHMENT OF INT BRACED WALL LINES</u>
  -CL'G OR FLR/TRUSSES LOCATED DIRECTLY ABV. INT. BRACED WALL LINES TO BE ATTACHED W/ 8d NAILS 6" O.C. TOENAILED. WHEN CL'G, FLR/TRUSSES ARE NOT DIRECTLY ABV. OR ARE PERPENDICULAR TO INT BRACED WALL LINE ADD 2X4 BLOCKING AT 16" O.C. BTWN FLR/ROOF FRAMING. BLK'G TO BE ATTACHED W/ 3-8d NAILS TOENAILED AT EA. END TO FLR/ROOF FRAMING. EACH BLOCK SHALL BE TOENAILED TO INT BRACED WALL LINE W/ 3-8d NAILS TOENAILED
- <u>PORTAL FRAMING</u>
  -CONTINUOUS GARAGE DOOR HEADER TO EXTEND FULL LENGTH OF BRACED WALL SEGMENT
  -CORNER OF GARAGE TO BE FULL SHEET OF 4' WIDE SHEATHING, PRODUCE "L" SHAPE BY CUTTING EXCESS SHEATHING AT GARAGE DOOR OPENING, NAIL TO STUDS 3" O.C.
  -BOTTOM OF HEADER FOR PORTAL FRAME AT TOP OF OPENING

PORTAL FRAME CORNER DETAIL

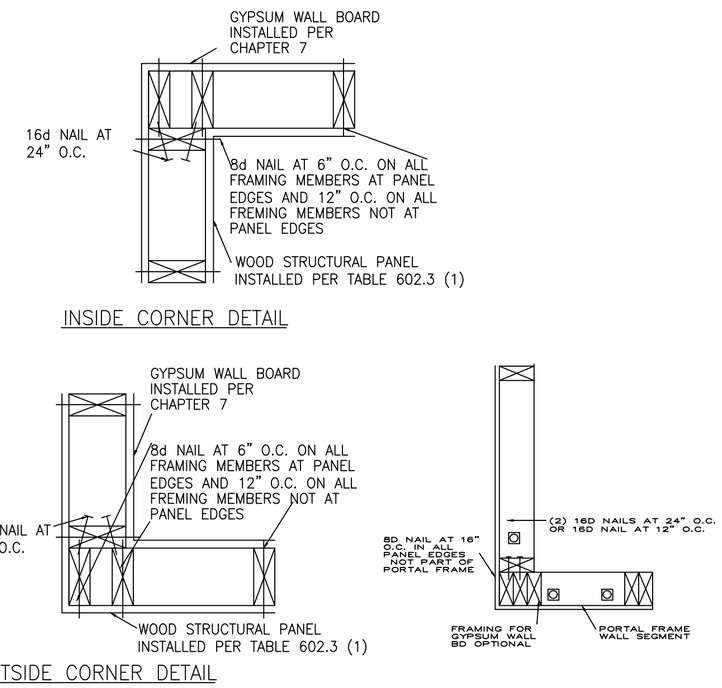

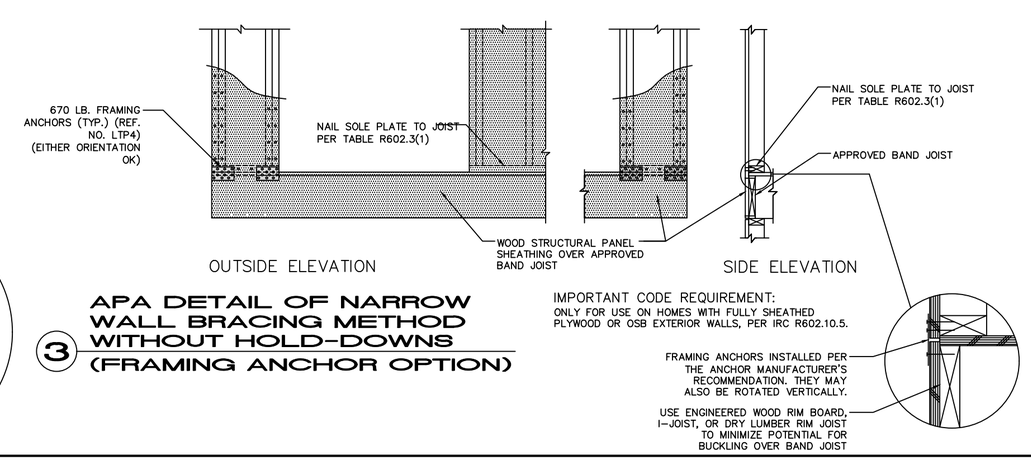

IMPORTANT CODE REQUIREMENT:
ONLY FOR USE ON HOMES WITH FULLY SHEATHED PLYWOOD OR OSB EXTERIOR WALLS, PER IRC R602.10.5.

3 APA DETAIL OF NARROW WALL BRACING METHOD WITHOUT HOLD-DOWNS (FRAMING ANCHOR OPTION)

NOTES:

DESIGN CRITERIA						
YARD LUMBER				STRUC. LAM. WOOD BEAM		
Fb = 1,200 PSI				Fb = 2,600 PSI		
Fv = 105 PSI				Fv = 285 PSI		
E = 1,500,000 PSI				E = 1,800,000 PSI		
MINIMUM SOIL BEARING PRESSURE=2,500 PSF						
WIND LOAD = 90 M.P.H. NOMINAL						
	ROOFS			FLOORS		BALCONIES
	WOOD OR ASPHALT SHINGLES	MISSION TILE	BUILT-UP	WOOD, CARPET OR VINYL	CER. TILE QUARRY TILE STONE	SPACED DECK
DESIGN LOADS						
DEAD LOAD (PSF)	10	20	19	10	20	7
LIVE LOAD (PSF)	30	30	30	40	40	60
TOTAL (PSF)	40	50	49	50	60	67

Great care and effort have gone into the creation of the design and engineering of these plans. However, because of the impossibility of providing any personal and/or "on-the-site" consulation and supervision over the actual construction, and because of unforeseen local conditions, Design America, local code requirements, and other local building and weather conditions, Design America assumes no responsibility for any damages, including structural failures, due to any deficiencies, shortcomings, errors in the design, buyer's or builder's failure to follow, or misuse of the plans, or any unusual conditions. It is recommended that you consult with your local building officials, or your engineer, and check with your local building officials, prior to start of actual construction.

These drawings are not to be copied or reproduced without written permission from Design America, Inc. © Date of original design.

NOTES:
THESE DRAWINGS ARE TO BE USED IN CONJUCTION WITH THE ACCOMPANYING GENERAL BUILDING SPECIFICATIONS PREPARED BY DESIGN AMERICA INC. ALL LOCAL CODES SHALL PREVAIL. CONTRACTOR TO VERIFY ALL DIMENSIONS BEFORE CONSTRUCTION BEGINS.

DESIGNAMERICA

WALL BRACING

3/29/2024

WB.1