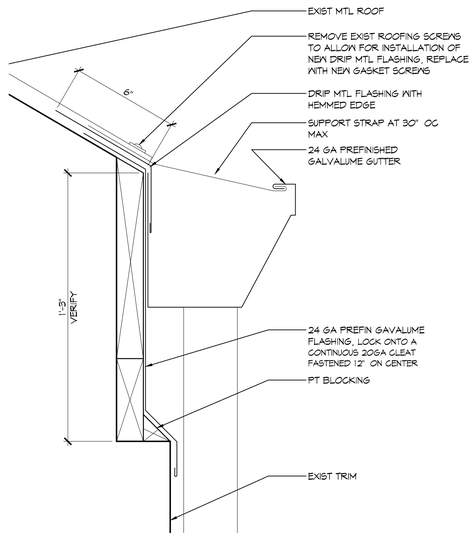

5 ENLARGED DETAIL AT GUTTER

SCALE - 1" = 1'-0"

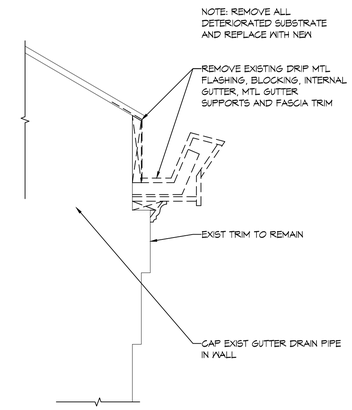

4 EXIST/DEMO SOFFIT

SCALE - 1" = 1'-0"

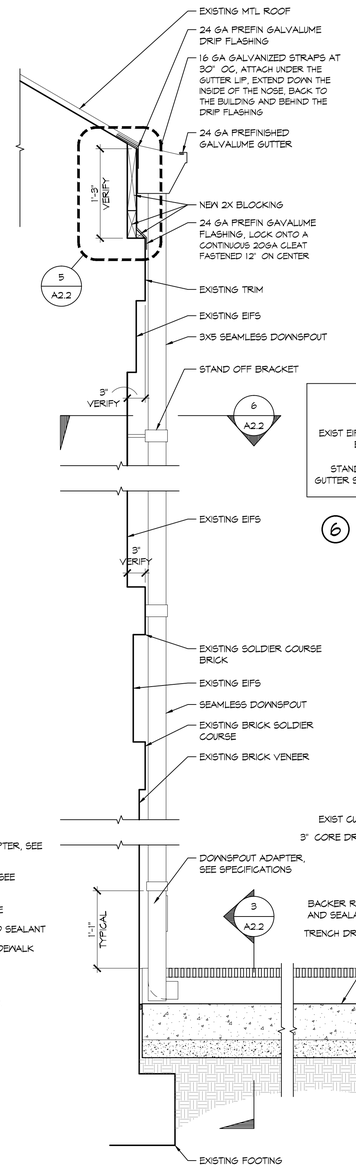

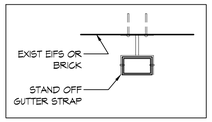

6 DETAIL

SCALE - 1" = 1'-0"

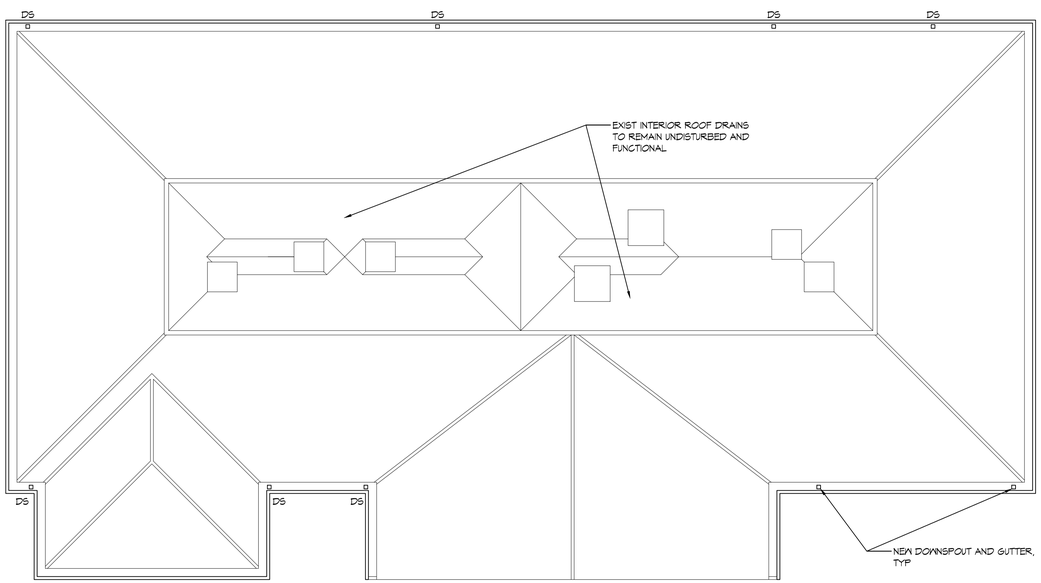

EXISTING ROOF PLAN

SCALE 1/8" = 1'-0"

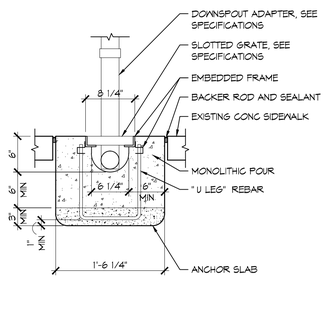

3 DETAIL

SCALE - 1" = 1'-0"

2 DETAIL AT SIDEWALK

SCALE - 1" = 1'-0"

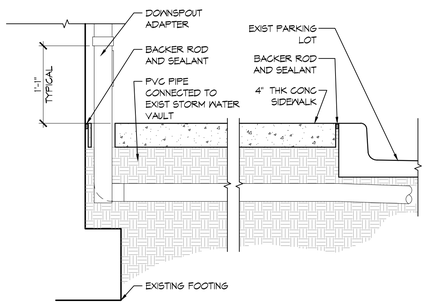

1 DETAIL AT PARKING LOT

SCALE - 1" = 1'-0"

Copyright © 2014

Note: All drawings and specifications furnished by Bird and Kamback Architects are instruments of service and may not be reproduced in any form or used for other work without consent of the Architect.

Please consider the environment before printing this drawing.

State of Alabama
Darryl Bird
3985
8-27-15
Registered Architect

304A Franklin Street
Huntsville, AL 35801
ph 256 536 1160
fax 256 536 1460
BKarchitects.com

BIRD and KAMBACK architects llc

GUTTER AND FASCIA REPAIRS TO HHA CENTRAL OFFICE

200 WASHINGTON STREET
HUNTSVILLE, ALABAMA

REVISIONS

NO.	DATE / DESCRIPTION
△	
△	
△	
△	
△	

DATE 08-27-2015

PROJECT NO. 1489

SHEET TITLE

ROOF PLAN AND DETAILS

SHEET NO.

A2.2

Drawing name: S:\BK Projects\2014\1489 - Repairs to 200 Washington St\400 - Drawings\402 - CAD\402.2 - Sheet Files\1489-A2.2.dwg Plotted on: Aug 28, 2015 - 10:26am Scale Factor: 1